Interior dimensions		
Width	Depth	Height
1000	500	350
Weight	Approx. 21 Kg	
Wall Thickness		7mm

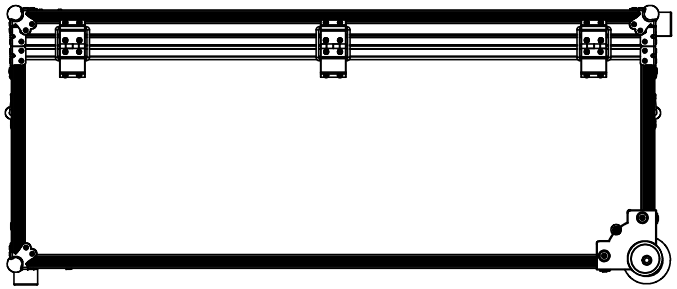

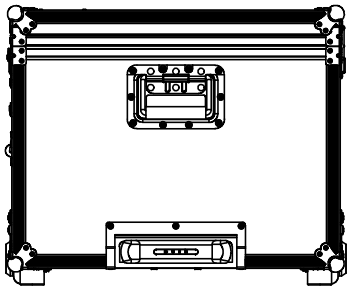

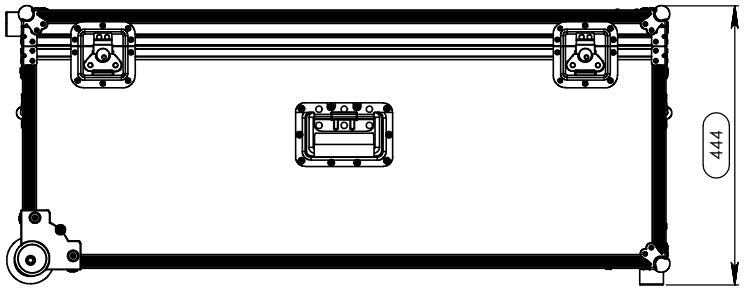

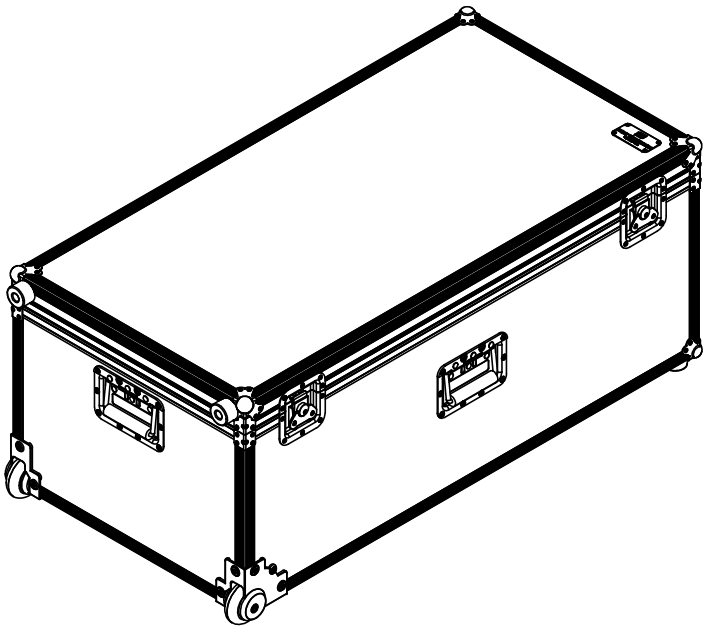

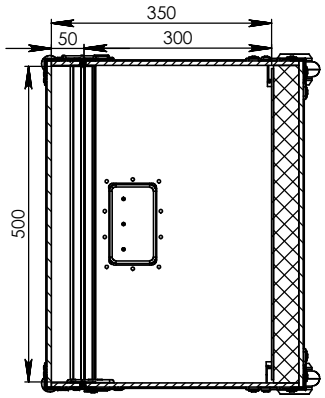

SECTION A-A

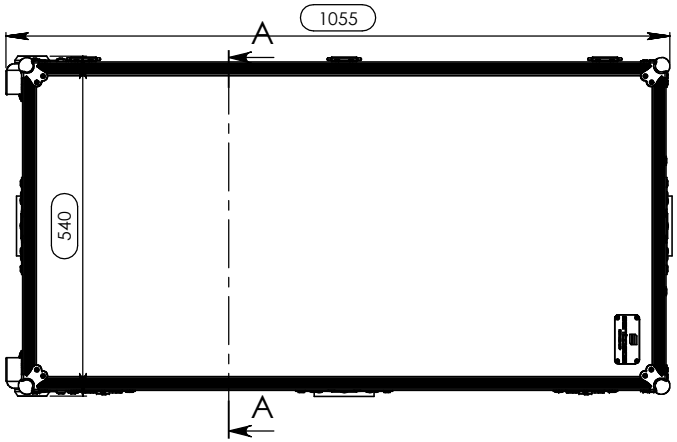

	Name	Date
Drawn by	DanielLopes	30-01-2012
Reference	MC2.1001	
Scale 1:6	units in mm	general tolerance ±0.5mm
Multicase, 1000x500x350+50 mm, trolei,		

santosom